# Qualitative Comparison of Cavity Ring-Down vs. Direct Measurement Absorption Spectroscopy for Determining ppb Moisture Levels in UHP Gases

R. Hardiman, D. McKee, K. Kimmerle
**Process Tube Systems Inc.**
9025 SW Hillman Ct., Ste. 3132
Wilsonville OR 97070
sales@process-tube.com
www.process-tube.com

***Abstract***

Moisture is generally accepted to be a significant contaminant in semiconductor process gases. The presence of moisture in process gases has many adverse effects. In corrosive and reactive gases, moisture can result in damage to the gas lines from corrosive by-products, creates electrical defects and interferes with application of chemicals to the wafer surface, and contributes to an increase in gate oxide growth rate.

As such, the fast, accurate detection of moisture at the ppb level has become a necessity when monitoring any process gas stream. Two different methods for measuring moisture at the ppb level have been compared under controlled conditions. A qualitative comparison of the Cavity Ring-Down and Direct Measurement Absorption Spectroscopy methods includes an evaluation of response-time, accuracy, and instrument dry-down time.

***Introduction***

The measurement of moisture in ultra-high purity gas systems has evolved from the early chilled mirror dew point analyzer based systems to the metal oxide Faraday's Law based systems and now to diode laser absorption spectroscopy. Two somewhat different laser absorption methods to detect moisture at the ppb level have been developed and are commercially available.

Although both instruments make use of absorption spectroscopy to determine the concentration of moisture in a high purity gas stream, each arrives at the concentration measurement in different ways.

This study presents a detailed description of the test system and method of obtaining the data. Two moisture analysis instruments were installed into a test manifold and challenged with multiple levels of moisture generated from a NIST traceable permeation tube in a purified carrier gas. All pertinent data including pressures, flows, temperatures, and each instrument's measurement of moisture were recorded. A direct comparison of each instrument's accuracy and speed was made.

The focus of this study is to compare the results that each system produces for the routine determination of moisture in a UHP gas distribution system. Each method has its own unique advantages. The present study is focused on the ability of the instruments to measure the moisture level. The data collected is presented and reviewed to provide insight into the benefits of each instrument's method for obtaining a concentration measurement. In addition to the collection of data, trained gas analysis technicians operated the two instruments and a qualitative comparison of the benefits and features of each instrument is discussed.

***Absorption Spectroscopy***

Absorption spectroscopy is the quantification of the energy that molecules absorb and translate into bending and stretching of the bonds between the atoms in molecules. A focused wavelength specific light source (laser) is directed into a sample containing water molecules. The water molecules will absorb some of the energy and translate it into stretching and twisting of the Oxygen-Hydrogen bonds. The remaining light is absorbed by a photodiode. By quantifying the energy absorbed, a concentration of moisture can be determined.

Two different types of spectroscopy equipment have been compared. Tuned Diode Laser Absorption Spectroscopy (TDLAS) and Cavity Ring Down Spectroscopy (CRDS). TDLAS uses a direct measurement of the energy absorbed from a modulating laser while, CRDS measures the time for the energy to be dissipated in a sample cell. Each system collects the energy data and translates it via Beers Law into a concentration.

A detailed discussion of the theory of operation of each system can be found in the references [2,3]. The following descriptions are taken from the instrument suppliers description of their technology.

***Cavity Ring Down Spectroscopy [3]***

In essence, the principle of Cavity Ring-Down Spectroscopy or CRDS is based on absorption spectroscopy. Absorption spectroscopy provides the most general spectroscopic method for detection of important trace species. In the gas phase, the spectrum of a species consists of many sharp rotational lines that provide high selectivity (a molecular 'fingerprint.') The strength of a line and the number of molecules in the lower state of the transition determine the sensitivity of this method. Water vapor is particularly favorable because its spectrum extends into the near infrared where several widely spaced rotational lines with strong absorption can be found.

In a conventional absorption measurement, the intensity of light transmitted through a sample is compared to the transmission without the sample. The smallest number density that can be determined by this method is given by:

$$Nmin = (dI/Io)_{noise}/(s(v)L)$$

where $(dI/Io)_{noise}$ is the smallest fractional change in light intensity that can be detected; s(v) is the absorption cross section as a function of laser frequency; and L the pathlength. It is clear from this formula that to maximize sensitivity, one wants to select a molecular transition with a large "s", as well as have the longest possible pathlength L, and the smallest possible (dI/Io)noise . The pathlength L in the conventional absorption method is limited by the physical size of the apparatus. One can increase the effective pathlengths from 10 to 100 times the physical lengths using "multiple pass" cells, such as White or Herriott cells. Therefore, the sensitivity and accuracy is often limited by the amplitude noise of light sources and the detection system.

CRDS, on the other hand, is not affected by the laser noise because it only measures "time". CRDS is an emerging technique that has been demonstrated to dramatically increase the sensitivity of absorption spectroscopy. It utilizes optical excitation of a stable optical resonator formed from two ultra-high reflectivity mirrors separated by a distance d, the ring-down cavity (RDC). In a cavity ring-down measurement, a fraction of radiation from a narrow bandwidth laser is coupled into the cavity and then abruptly turned off. Light inside the cavity is reflected by the high reflective mirrors many times, leaking out a tiny amount upon each reflection. Light leaking out of the cavity is the ring-down signal. This signal has an envelope that is a first order exponential decay.

$$I=Io \exp(-t/T)$$

This decay arises from losses in the mirror coatings and absorption by the gas sample contained between the mirrors. When light is tuned away from the molecular resonance or the cell is empty, the ring-down time, $T_{empty}$ is determined by

$$T_{empty} = d/c(1-R)$$

When gas molecules are present inside the cell, the ring-down time,T(v) , is then determined also by absorption by the molecule,

$$T(v) = d/c(1-R+s(v)*N*d)$$

In the above equations, $T_{empty}$ is the ring-down time of the empty cavity, T(v) is the ring-down time at frequency v; d is the physical separation of the two cavity mirrors; R is the reflectivity of the mirrors (assumed to be the same for both mirrors); c is the speed of light; s(v)is the absorption cross section of the particular molecules that absorb light at frequency v; N is their number density, which is proportional to the absolute concentration. CRDS measurement involves initial measurement of ring-down time $T_{empty}$, often measured at a frequency away from molecular absorption, which is independent of frequency in the high reflective region of the mirrors, and the ring-down time T(v) at the peak frequency of molecular absorption. Concentration N can be calculated from the following equation:

$$1/T(v) - 1/T_{empty} = c*s(v)*N$$

Research by Romanini and Lehmann have shown that the Ring-Down Cavity Cell (RDC) can be viewed as having an effective pathlength L=d/(1-R), where R is the reflectivity of the mirrors. Since mirrors are commercially available today with reflectivity on the order of 99.999%, the effective optical pathlength of the cell is increased by 10,000 times over the physical dimensions of the device. Thus an absorption pathlength of 10,000 meters is achieved in the cell on the order of one meter physical length. This can be compared with traditional "multiple pass" cells, where effective pathlengths 10-100 meters are the practical limit.

For moisture detection, the instrument has relied upon a 1.39 diode laser that can be tuned on and off of resonance with a strong absorption line in the first overtone band of water. Based upon the known cross-section of this absorption line and the observed value for the noise in the determination of the ring-down time, the instrument can theoretically detect water vapor at a few parts per trillion (ppt) levels in nitrogen or other inert gases. In addition, it is directly calibrated since the method will yield the absorption coefficient of the gas. This absorption coefficient is related to the number density by a known factor, the cross-section of the line.

The major components of a CRDS system include: a single mode diode laser, a Ring-Down Cavity (RDC) with a pair of high reflective mirrors, a photo detector to detect the transmitted light through the RDC. Other components are mode-matching optics to condition the laser beam shape for optimum coupling, an acousto-optic modulator (AOM) to quickly deflect the laser out of the cavity when sufficient light builds up inside the RDC, an optical isolator to prevent light feedback to the diode laser, a computer with data acquisition for controlling the system, and taking data and analysis.

### *Tuned Diode Laser Absorption Spectroscopy [2]*

TDLAS is a spectroscopic technique that utilizes a diode laser as its light source. TDLAS has advantages over other techniques because the moisture sample only comes in contact with a few optical components that are made from very robust materials. The tunable diode laser is tuned and modulated over a narrow wavelength range that is specific to moisture by changing the current to the laser.
The TDLAS technique is governed by Beer's Law:

$$Ln [Io/I] = S*L*N$$

I is the measurement of beam intensity when tuned to the absorbing wavelength of moisture

Io is the reference measurement or beam intensity when tuned away from the moisture-absorbing wavelength

S is the fundamental absorption line strength and is a fixed constant

L is the path length of the beam through the sample and is a fixed constant

N is the number of water molecules contained in the beam path passing through the sample

Other spectroscopic techniques that follow Beer's Law take the reference measurement, $I^o$, by sending the light beam through a different optical path and generally, utilize a second detector. By rapidly tuning the laser, TDLAS technology uses a single light source, a single light path and a single detector and, therefore, does not require any recalibration.
In spectroscopy, a longer path length is one way to achieve more sensitivity. Inside the Herriott Cell, the laser is reflected back and forth numerous times by mirrors inside the measuring cell. By making multiple passes, this increases the laser path length to achieve extremely high sensitivity. TDLAS technology offers a robust and simple optical design with the sample and reference measured with a single laser source and a single detector.

***Experimental Set-up***

Following the guidelines published by Sematech (1) a system was set-up to challenge two moisture analysis instruments with the same moisture laden gas stream. Figure 1 is a schematic of the test system. The Nitrogen used in the test had the following analysis:

| | |
|---|---|
| O2 PPM | 0.30 |
| H20 PPM | <0.10 |
| CO PPM | 0.22 |
| Total Purity By Difference | 99.9999% |

The Nitrogen dewar was connected to a manual isolation valve and regulator. The Regulator (Tescom 642662KBM21029) was set to 50 psig. The regulated gas flowed through a filter/purifier (Aeronex GateKeeper SS500K4R) to remove trace impurities. The "zero-gas" steam was then split with one branch flowing to a point just upstream of the inlet to each analyzer. The other branch was connected to an additional filter/purifier and flows to the moisture introduction circuit. The moisture generator is a NIST traceable permeation device (G-Cal Permeation device #1614 115ng/min@50 deg C). The moisture content is a function of temperature. An external resistance type electrical heater with a controller was used to maintain the temperature of the permeation device.

Four mass flow controllers were used to control flow. Two 20 slpm controllers (Unit 8160) were installed in parallel in the moisture introduction circuit. One 10 slpm controller was installed on a vent tee upstream of each moisture analyzer. The flowrate to each analyzer was determined and controlled by setting the moisture introduction MFCs to flow an excess of the minimum required flow and controlling and measuring the vented flow upstream of each instrument. The balance of the flow would then be entering the respective analyzer. Temperature was measured at the permeation device, outlet from the moisture introduction circuit and upstream of each analyzer. Pressure was measured at the main Nitrogen regulator and at the connection point between the moisture introduction circuit and the analyzer feed manifold. The flow path set-up as described, the test system had the capability to dry down the instruments by flowing zero gas to each and allowing it to flow through each instrument. The system could also continuously flow past the permeation device and out to vent to establish a steady state equilibrium permeation condition.

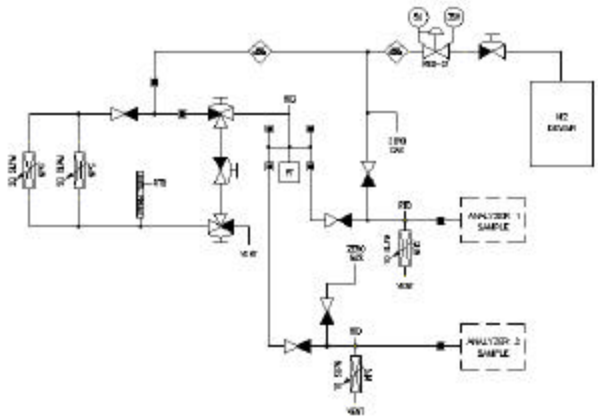

FIGURE 1

***Test Procedure***

Testing was carried out by first drying down each instrument, establishing a steady state condition in the moisture introduction circuit, and then introducing the moisture sample to the instruments. Data was collected that showed the time from first moisture entering the instrument to instrument reaching steady state reading. The dry down time for each instrument after each test was also recorded. A low concentration moisture challenge was conducted to determine the lowest detection level.

***Results***

After a period of 12-14 hours dry-down on zero gas and establishing a steady state condition in the moisture introduction circuit the testing was initiated. Figure 2 shows the curves of each analyzer. The first inflection point in the curves at 1-1.5 ppb level is an attempt to achieve as low a moisture level as possible. The CRDS unit levels off at the 1.25 ppb level. The sharp spikes in the data were later found to be the result of not having any curve smoothing algorithm in the device. The TDLAS curve also appears to track a trend of increasing moisture from the 1.25 to 1.75 ppb level. The TDLAS curve exhibits a step like change as a result of the software averaging the raw data.

The second inflection point in the curve was the result of increasing the temperature slightly from 67F to 70F. The increased temperature results in an immediate increase in moisture content. Both instruments track this change with the TDLAS software smoothing out the raw data that is shown in the CRDS unit. The last inflection point 11 hours into the test is the return to zero gas. The dry-down time of the CRDS

system, with residual moisture from the system reaching zero is about 2-hours. The TDLAS system also detects the zero gas, reaching a final zero 12 hours later.

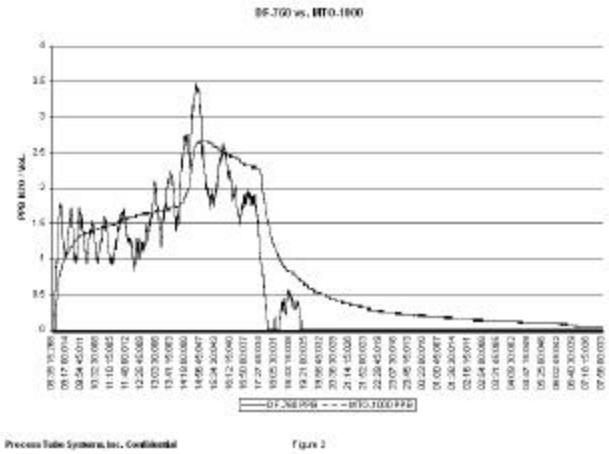


Figure 3 is the second test run results. This test was a 9-10 ppb challenge to the instrument. The CRDS system responds reaching better than 90% of the peak reading in 45 minutes. The TDLAS unit reaches a similar level 2.5 hours later. Both systems reach a similar peak level at the 9.2-9.4 ppb level. After the introduction of zero gas the CRDS system reaches zero in 30 minutes. The TDLAS system dried down in 14 hours.

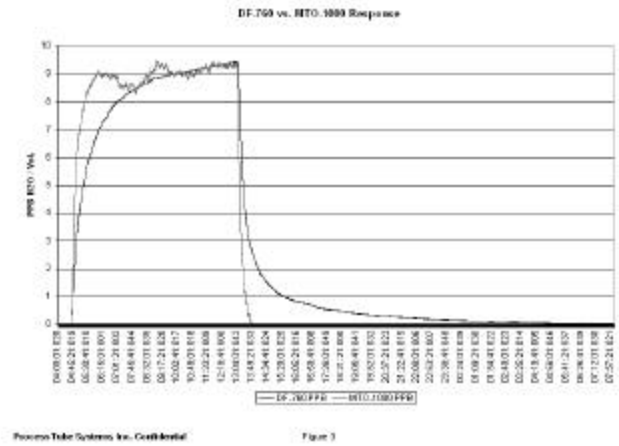


Figure 4 is the third test run. Both systems are supplied with the challenge gas. The CRDS system reaching 90% of the final level 9 ppb within 30 minutes. The TDLAS system reaching the same level 1 hr 20 minutes into the test. The CRDS system reaches a steady level, considering the lack of a curve smoothing algorithm, at the 1 hr 20 minute point. The TDLAS system reaches a similar leveling off point 2.5 hrs later. After the introduction of zero-gas to the analyzers the CRDS dries down within 1.5 hrs, the TDLAS system zeroing 12 hours later.

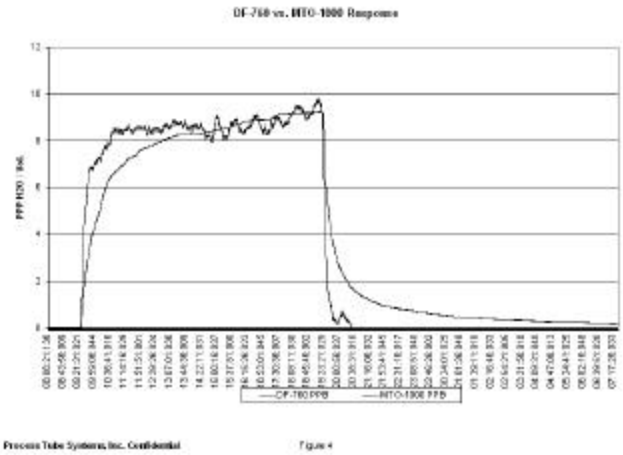


### *Conclusions*

Two types of moisture analyzers were challenged with the same dry and moist nitrogen streams. The response time, reading stability and dry-down time were measured. The CRDS system appeared to respond faster to the challenge, reached a steady state level and dry down faster than the TDLAS. Since there was no absolute moisture level determined, such as APIMS, only qualitative conclusions can be made. However, each system, after being dried down and calibrated according to the manufacturer's specifications was able to obtain a reading in the 1-2.5 ppb level. This should not be taken to be the lowest level possible. It was the lowest level the test system could produce. The results may be affected by the sample flowrate. The TDLAS system collects a sample at 1 slpm [2] and the CRDS at 2 slpm [3]. By sampling more gas, the CRDS would see the sample sooner. The comparison of the raw CRDS data to the curve smoothed TDLAS data may also show the effect of having software analysis.

### *Acknowledgments*

The authors would like to acknowledge the contribution made to this study by both Delta-F and Tiger Optics and thank them for allowing their equipment to be tested side-by-side.

The testing was conducted at the Process Tube Systems, Inc. facility in Wilsonville OR. From January 9-14 2002. During the normal fabrication process at PTS moisture and other contaminant are routinely tested using state-of –the-art moisture detection equipment. Technicians at PTS are highly skilled at operating the test equipment and evaluating the results.

### *References*

1. "SEMASPEC Test Method for Determination of Moisture Contribution by Gas Distribution System Components" Technology Transfer #90120397B-STD Sematech February 22, 1993, Jeff Riddle.

2."Theory of Operation"-UltraTrace Dual Moisture/Oxygen Analyzer DF-760 Instruction Manual, Delta-F Corporation Woburn MA.

3. “Principle of Operation” MTO-100-H20 Trace Gas Moisture Analyzer Instruction Manual, Tiger Optics Warrington PA.